Kawasaki Heavy Industries, Ltd

Robot Business Division

Tokyo Head Office/Robot Division
1-14-5, Kaigan, Minato-ku, Tokyo 105-8315, Japan
Phone: +81-3-3435-2501 Fax: +81-3-3437-9880

Akashi Works/Robot Division
1-1, Kawasaki-cho, Akashi, Hyogo 673-8666, Japan
Phone: +81-78-921-2946 Fax: +81-78-923-6548

Nishi-Kobe Works/Robot Division
234, Matsumoto, Hasetani-cho, Nishi-ku, Kobe, Hyogo
651-2239, Japan
Phone: +81-78-915-8247 Fax: +81-78-915-8239

Global Network

Kawasaki Robotics (USA), Inc.
28140 Lakeview Drive, Wixom, MI 48393, U.S.A.
Phone: +1-248-446-4100 Fax: +1-248-446-4200

Kawasaki Robotics (UK) Ltd.
Unit 4 Easter Court, Europa Boulevard, Westbrook
Warrington Cheshire, WA5 7ZB, United Kingdom
Phone: +44-1925-71-3000 Fax: +44-1925-71-3001

Kawasaki Robotics GmbH
Im Taubental 32, 41468 Neuss, Germany
Phone: +49-2131-34260 Fax: +49-2131-3426-22

Kawasaki Robotics Korea, Ltd.
43, Namdong-daero 215beon-gil, Namdong-gu, Incheon,
21633, Korea
Phone: +82-32-821-6941 Fax: +82-32-821-6947

Kawasaki Robotics (Tianjin) Co., Ltd.
1·2/F, Building 6, No.19 Xinhuan Road, TEDA, China
Phone: +86-22-5983-1888 Fax: +86-22-5983-1889

Taiwan kawasaki Robot Center
3F, No.31, Ln.216, Gongyuan Rd.,Hsinchu City
30069, Taiwan(R.O.C)
Phone: +886-3-562-0518

Kawasaki Motors Enterprise (Thailand) Co., Ltd.
(Rayong Robot Center)
119/10 Moo 4 T.Pluak Daeng, A.Pluak Daeng, Rayong 21140
Thailand
Phone: +66-38-955-040-58 Fax: +66-38-955-145

Singapore Kawasaki Robot Center
100G Pasir Panjang Road #06-10
Singapore 118523
Phone: +65-6513-3145

Kawasaki Heavy Industries (India) Pvt. Ltd.
Robot Division
Plot No. 136, Sector-37, Pace City 1,
Gurgaon, 122101 Haryana, India
Phone: +91-124-437-1845

* Materials and specifications are subject to change without notice.

Kawasaki Robotics website
https://robotics.kawasaki.com/

Kawasaki Robotics brand site XYZ
https://robotics.kawasaki.com/ja1/xyz/en/

Kawasaki Robostage (showroom)
https://robotics.kawasaki.com/ja1/robostage/en.html

CAUTIONS TO BE TAKEN TO ENSURE SAFETY

- For those persons involved with the operation / service of your system, including Kawasaki Robot, they must strictly observe all safety regulations at all times. They should carefully read the Manuals and other related safety documents.
- Products described in this catalogue are general industrial robots. Therefore, if a customer wishes to use the Robot for special purposes, which might endanger operators or if the Robot has any problems, please contact us. We will be pleased to help you.
- Be careful as Photographs illustrated in this catalogue are frequently taken after removing safety fences and other safety devices stipulated in the safety regulations from the Robot operation system.

ISO certified in Akashi Works and Nishi-Kobe Works.

Cat. No. 3L2139 Oct. '21 Ⓜ

Kawasaki
Powering your potential

Kawasaki Robot

Large Robots

up to 300kg payload

Small-to-medium robots
up to 80kg payload
Large robots
up to 300kg payload
Extra large robots
up to 1,500kg payload
Dual-arm Collaborative robots
Explosion-proof painting robots
Sealing robots
Arc welding robots
Palletizing robots
Medical & pharmaceutical robots
Picking robots
Wafer transfer robots

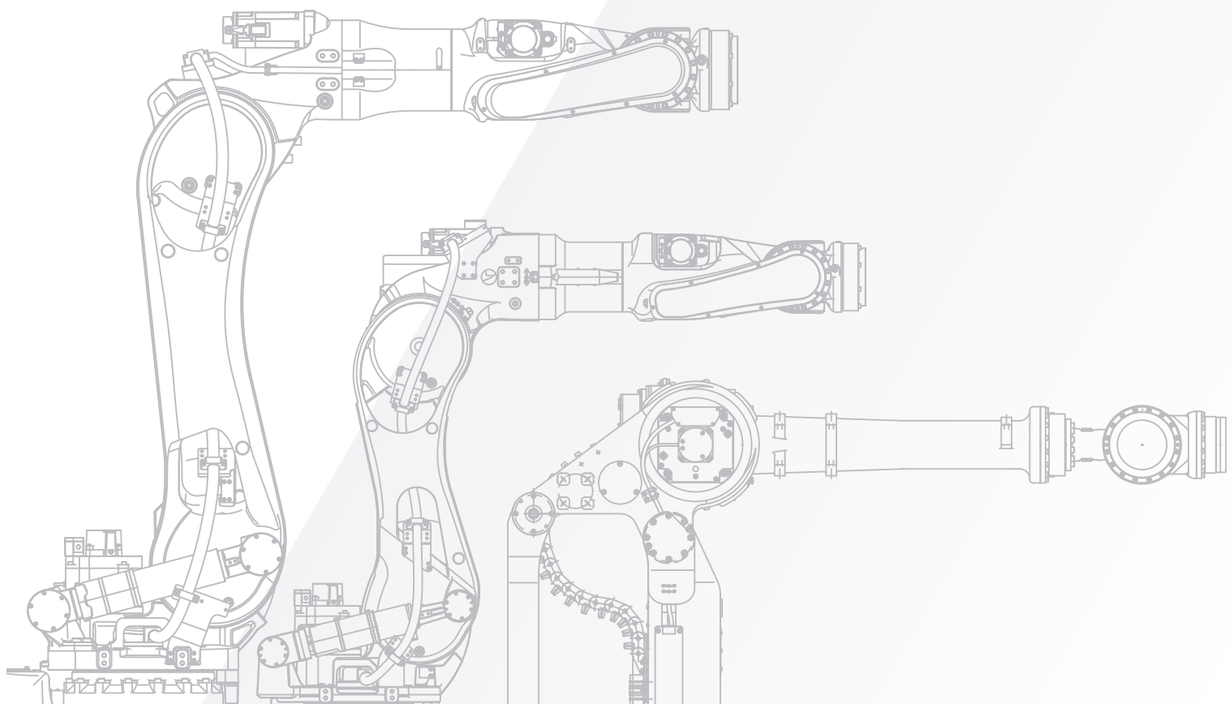

Large general-purpose robots

Kawasaki's large general-purpose robots (100-300kg payload) are used in diverse industries, such as the automobile, aerospace, machinery, metal working, electric, electronics and food industries.
With high versatility, they can be used for a wide range of applications including assembling, handling and spot welding.

BX/BT series

The BX/BT series robots are equipped with hollow wrists and arms. They have a wide motion range and are used for diverse industries and applications.

BX100N

BX165N/BX165L

BX200X

BX250L

BX300L

BT165L

BT200L

Product map

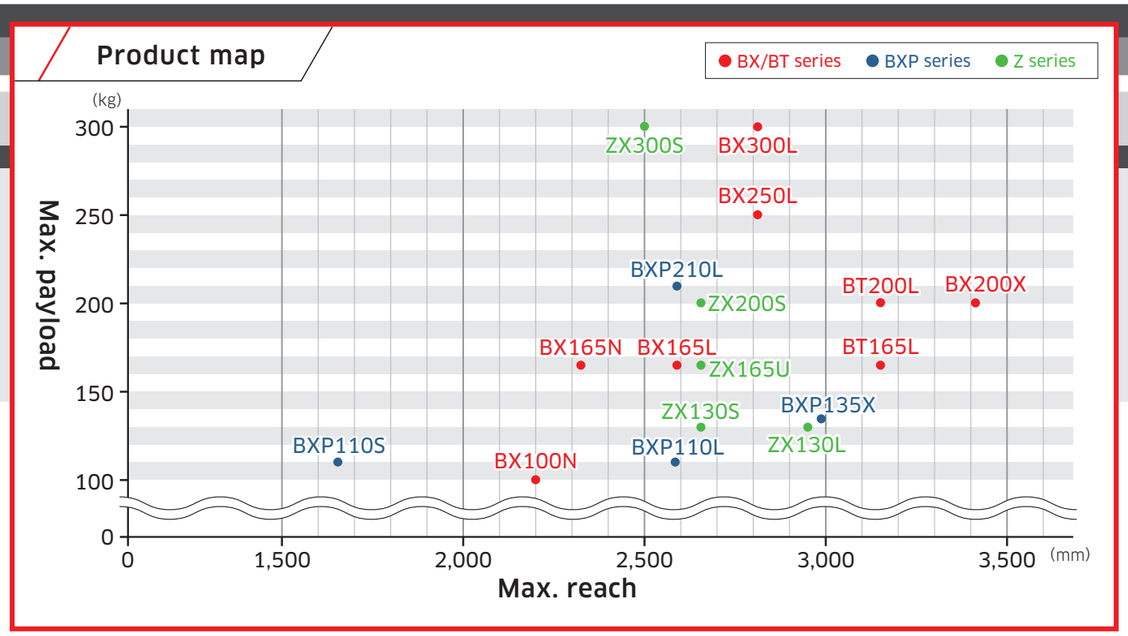

BXP series

The BXP series features slim bodies, high rigidity and performance. They have evolved from the BX/BT series robots.

BXP110S

BXP110L

BXP135X

BXP210L

ZX series

The ZX series robots are long-run products with a great number of supply records. They are suitable for harsh environment thanks to wrist motors located at the shoulder.

ZX130S

ZX130L

ZX165U

ZX200S

ZX300S

BX/BT series

【Applications】

Assembling　Handling　Spot welding

BX100N

Standard Specifications

Type		Articulated robot
Degree of freedom (axes)		6
Payload (kg)		100
Max. reach (mm)		2,200
Position repeatability*1 (mm)		±0.06
Motion range (°)	Arm rotation (JT1)	±160
	Arm out-in (JT2)	+120 - −65
	Arm up-down (JT3)	+90 - −77
	Wrist swivel (JT4)	±210
	Wrist bend (JT5)	±125
	Wrist twist (JT6)	±210
Max. speed (°/s)	Arm rotation (JT1)	135
	Arm out-in (JT2)	110
	Arm up-down (JT3)	140
	Wrist swivel (JT4)	200
	Wrist bend (JT5)	200
	Wrist twist (JT6)	300
Allowable moment (N·m)	Wrist swivel (JT4)	588.4
	Wrist bend (JT5)	588.4
	Wrist twist (JT6)	294.2
Allowable moment of inertia (kg·m²)	Wrist swivel (JT4)	60
	Wrist bend (JT5)	60
	Wrist twist (JT6)	30
Mass (kg)		740
Mounting		Floor
Installation environment	Ambient temperature (℃)	0 - 45
	Relative humidity (%)	35 - 85 (No dew, nor frost allowed)
Degee of protection		Wrist : IP67 or equivalent　Base axes : IP54 or equivalent
Controller/Power requirements		F02/7.5kVA

*1: Conforms to ISO9283

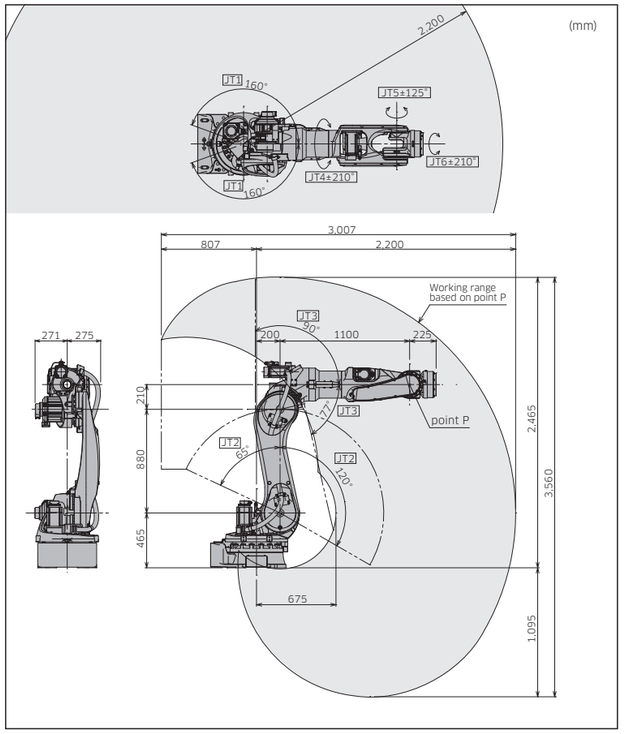

BX165N

Standard Specifications

Type		Articulated robot
Degree of freedom (axes)		6
Payload (kg)		165
Max. reach (mm)		2,325
Position repeatability*1 (mm)		±0.06
Motion range (°)	Arm rotation (JT1)	±160
	Arm out-in (JT2)	+76 - −60
	Arm up-down (JT3)	+90 - −75
	Wrist swivel (JT4)	±210
	Wrist bend (JT5)	±125
	Wrist twist (JT6)	±210
Max. speed (°/s)	Arm rotation (JT1)	105
	Arm out-in (JT2)	130
	Arm up-down (JT3)	130
	Wrist swivel (JT4)	120
	Wrist bend (JT5)	160
	Wrist twist (JT6)	300
Allowable moment (N·m)	Wrist swivel (JT4)	930
	Wrist bend (JT5)	930
	Wrist twist (JT6)	490
Allowable moment of inertia (kg·m²)	Wrist swivel (JT4)	99
	Wrist bend (JT5)	99
	Wrist twist (JT6)	49.5
Mass (kg)		875
Mounting		Floor
Installation environment	Ambient temperature (℃)	0 - 45
	Relative humidity (%)	35 - 85 (No dew, nor frost allowed)
Degee of protection		Wrist : IP67 or equivalent　Base axes : IP54 or equivalent
Controller/Power requirements		F02/7.5kVA

*1: Conforms to ISO9283

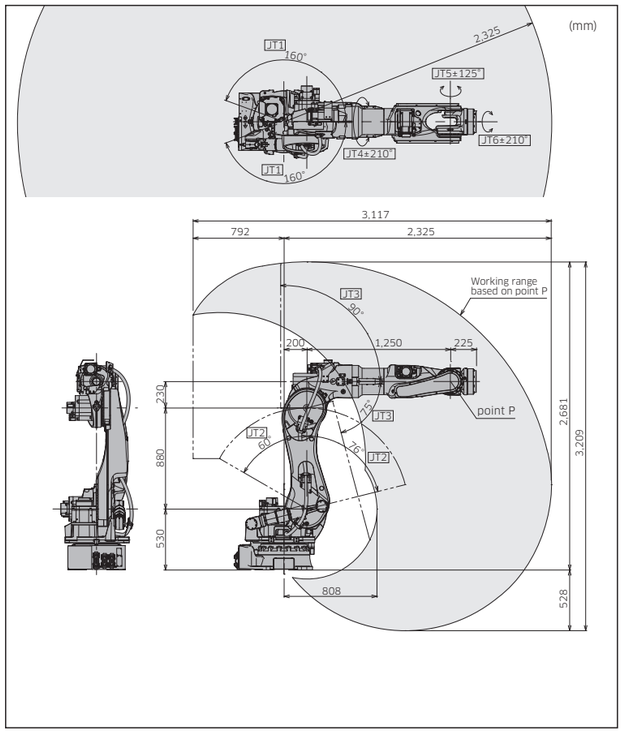

Features

- Built-in cables and hoses
- More compact and lighter than the BX series.

BX165L

Standard Specifications

Type		Articulated robot
Degree of freedom (axes)		6
Payload (kg)		165
Max. reach (mm)		2,597
Position repeatability*1 (mm)		±0.06
Motion range (°)	Arm rotation (JT1)	±160
	Arm out-in (JT2)	+76 - −60
	Arm up-down (JT3)	+90 - −75
	Wrist swivel (JT4)	±210
	Wrist bend (JT5)	±125
	Wrist twist (JT6)	±210
Max. speed (°/s)	Arm rotation (JT1)	120
	Arm out-in (JT2)	110
	Arm up-down (JT3)	130
	Wrist swivel (JT4)	170
	Wrist bend (JT5)	170
	Wrist twist (JT6)	280
Allowable moment (N·m)	Wrist swivel (JT4)	952
	Wrist bend (JT5)	952
	Wrist twist (JT6)	491
Allowable moment of inertia (kg·m²)	Wrist swivel (JT4)	99
	Wrist bend (JT5)	99
	Wrist twist (JT6)	49.5
Mass (kg)		890
Mounting		Floor
Installation environment	Ambient temperature (℃)	0 - 45
	Relative humidity (%)	35 - 85 (No dew, nor frost allowed)
Degee of protection		Wrist : IP67 or equivalent　Base axes : IP54 or equivalent
Controller/Power requirements		F02/7.5kVA

*1: Conforms to ISO9283

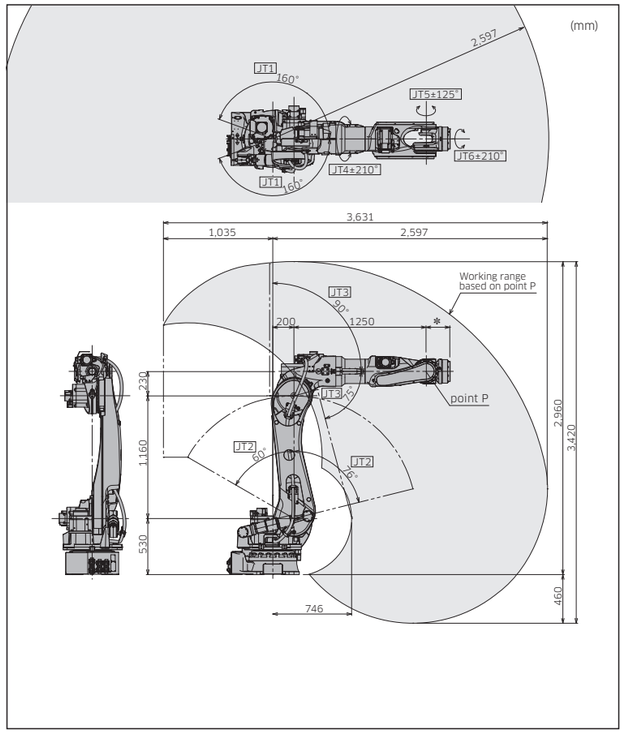

BX200X

Standard Specifications

Type		Articulated robot
Degree of freedom (axes)		6
Payload (kg)		200
Max. reach (mm)		3,412
Position repeatability*1 (mm)		±0.07
Motion range (°)	Arm rotation (JT1)	±180
	Arm out-in (JT2)	+76 - −60
	Arm up-down (JT3)	+90 - −110
	Wrist swivel (JT4)	±210
	Wrist bend (JT5)	±125
	Wrist twist (JT6)	±210
Max. speed (°/s)	Arm rotation (JT1)	125
	Arm out-in (JT2)	102
	Arm up-down (JT3)	85
	Wrist swivel (JT4)	105
	Wrist bend (JT5)	120
	Wrist twist (JT6)	200
Allowable moment (N·m)	Wrist swivel (JT4)	1,334
	Wrist bend (JT5)	1,334
	Wrist twist (JT6)	588
Allowable moment of inertia (kg·m²)	Wrist swivel (JT4)	199.8
	Wrist bend (JT5)	199.8
	Wrist twist (JT6)	154.9
Mass (kg)		1,450
Mounting		Floor
Installation environment	Ambient temperature (℃)	0 - 45
	Relative humidity (%)	35 - 85 (No dew, nor frost allowed)
Degee of protection		Wrist : IP67 or equivalent　Base axes : IP54 or equivalent
Controller/Power requirements		F02/7.5kVA

*1: Conforms to ISO9283

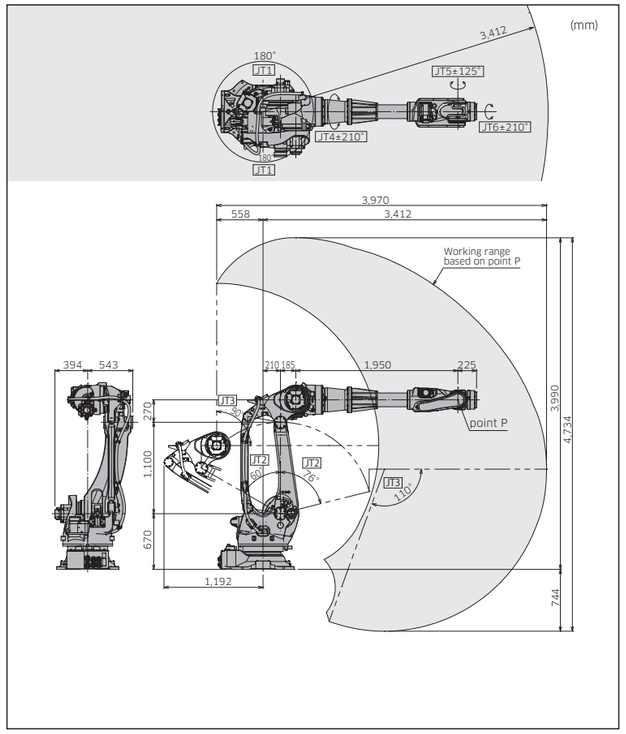

BX250L

Standard Specifications

Type		Articulated robot
Degree of freedom (axes)		6
Payload (kg)		250
Max. reach (mm)		2,812
Position repeatability*1 (mm)		±0.07
Motion range (°)	Arm rotation (JT1)	±180
	Arm out-in (JT2)	+76 - −60
	Arm up-down (JT3)	+90 - −120
	Wrist swivel (JT4)	±210
	Wrist bend (JT5)	±125
	Wrist twist (JT6)	±210
Max. speed (°/s)	Arm rotation (JT1)	125
	Arm out-in (JT2)	120
	Arm up-down (JT3)	100
	Wrist swivel (JT4)	140
	Wrist bend (JT5)	140
	Wrist twist (JT6)	200
Allowable moment (N·m)	Wrist swivel (JT4)	1,800
	Wrist bend (JT5)	1,800
	Wrist twist (JT6)	750
Allowable moment of inertia (kg·m²)	Wrist swivel (JT4)	200
	Wrist bend (JT5)	200
	Wrist twist (JT6)	165
Mass (kg)		1,460
Mounting		Floor
Installation environment	Ambient temperature (℃)	0 - 45
	Relative humidity (%)	35 - 85 (No dew, nor frost allowed)
Degee of protection		Wrist : IP67 or equivalent Base axes : IP54 or equivalent
Controller/Power requirements		F02/7.5kVA

*1: Conforms to ISO9283

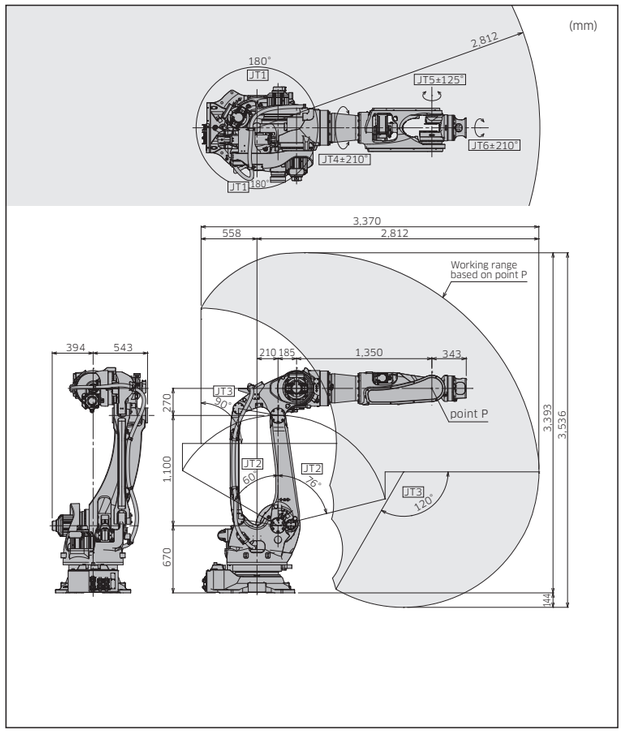

BX300L

Standard Specifications

Type		Articulated robot
Degree of freedom (axes)		6
Payload (kg)		300
Max. reach (mm)		2,812
Position repeatability*1 (mm)		±0.07
Motion range (°)	Arm rotation (JT1)	±180
	Arm out-in (JT2)	+76 - −60
	Arm up-down (JT3)	+90 - −120
	Wrist swivel (JT4)	±210
	Wrist bend (JT5)	±125
	Wrist twist (JT6)	±210
Max. speed (°/s)	Arm rotation (JT1)	125
	Arm out-in (JT2)	102
	Arm up-down (JT3)	85
	Wrist swivel (JT4)	105
	Wrist bend (JT5)	110
	Wrist twist (JT6)	180
Allowable moment (N·m)	Wrist swivel (JT4)	2,300
	Wrist bend (JT5)	2,300
	Wrist twist (JT6)	1,000
Allowable moment of inertia (kg·m²)	Wrist swivel (JT4)	240
	Wrist bend (JT5)	240
	Wrist twist (JT6)	200
Mass (kg)		1,460
Mounting		Floor
Installation environment	Ambient temperature (℃)	0 - 45
	Relative humidity (%)	35 - 85 (No dew, nor frost allowed)
Degee of protection		Wrist : IP67 or equivalent Base axes : IP54 or equivalent
Controller/Power requirements		F02/7.5kVA

*1: Conforms to ISO9283

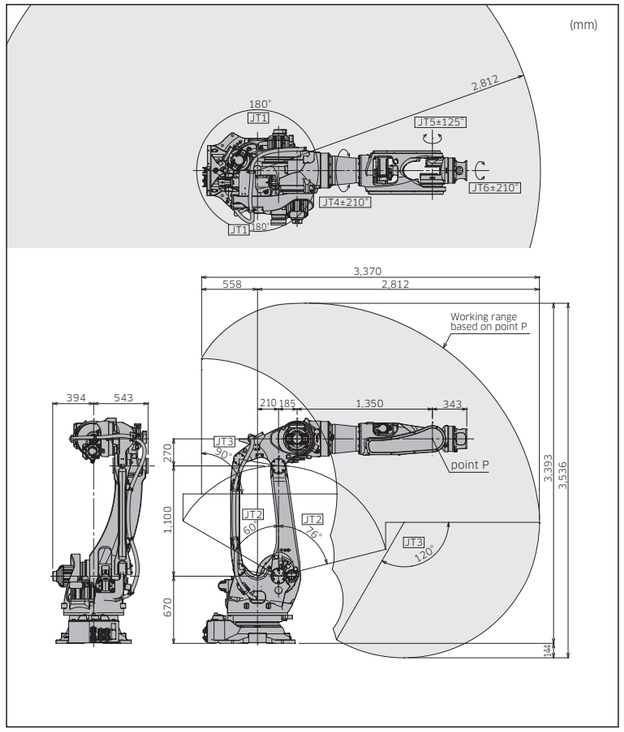

BT165L

Standard Specifications

Type		Articulated robot
Degree of freedom (axes)		6
Payload (kg)		165
Max. reach (mm)		3,151
Position repeatability*1 (mm)		±0.08
Motion range (°)	Arm rotation (JT1)	±160
	Arm out-in (JT2)	+80 - −130
	Arm up-down (JT3)	+90 - −75
	Wrist swivel (JT4)	±210
	Wrist bend (JT5)	±125
	Wrist twist (JT6)	±210
Max. speed (°/s)	Arm rotation (JT1)	120
	Arm out-in (JT2)	110
	Arm up-down (JT3)	130
	Wrist swivel (JT4)	170
	Wrist bend (JT5)	170
	Wrist twist (JT6)	280
Allowable moment (N·m)	Wrist swivel (JT4)	952
	Wrist bend (JT5)	952
	Wrist twist (JT6)	491
Allowable moment of inertia (kg·m²)	Wrist swivel (JT4)	99
	Wrist bend (JT5)	99
	Wrist twist (JT6)	49.5
Mass (kg)		1,100
Mounting		Shelf
Installation environment	Ambient temperature (℃)	0 - 45
	Relative humidity (%)	35 - 85 (No dew, nor frost allowed)
Degee of protection		Wrist : IP67 or equivalent Base axes : IP54 or equivalent
Controller/Power requirements		F02/7.5kVA

*1: Conforms to ISO9283

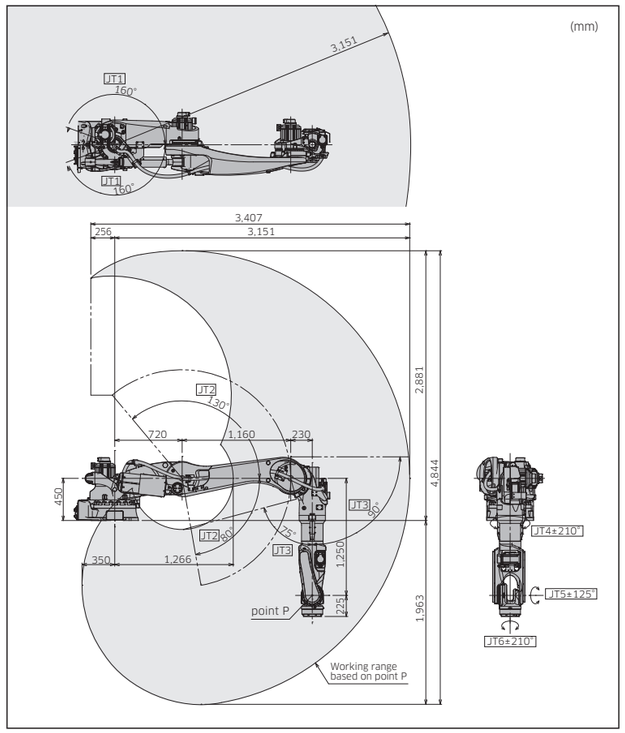

BT200L

Standard Specifications

Type		Articulated robot
Degree of freedom (axes)		6
Payload (kg)		200
Max. reach (mm)		3,151
Position repeatability*1 (mm)		±0.08
Motion range (°)	Arm rotation (JT1)	±160
	Arm out-in (JT2)	+80 - −130
	Arm up-down (JT3)	+90 - −75
	Wrist swivel (JT4)	±210
	Wrist bend (JT5)	±125
	Wrist twist (JT6)	±210
Max. speed (°/s)	Arm rotation (JT1)	105
	Arm out-in (JT2)	85
	Arm up-down (JT3)	100
	Wrist swivel (JT4)	120
	Wrist bend (JT5)	120
	Wrist twist (JT6)	200
Allowable moment (N·m)	Wrist swivel (JT4)	1,334
	Wrist bend (JT5)	1,334
	Wrist twist (JT6)	588
Allowable moment of inertia (kg·m²)	Wrist swivel (JT4)	199.8
	Wrist bend (JT5)	199.8
	Wrist twist (JT6)	154.9
Mass (kg)		1,100
Mounting		Shelf
Installation environment	Ambient temperature (℃)	0 - 45
	Relative humidity (%)	35 - 85 (No dew, nor frost allowed)
Degee of protection		Wrist : IP67 or equivalent Base axes : IP54 or equivalent
Controller/Power requirements		F02/7.5kVA

*1: Conforms to ISO9283

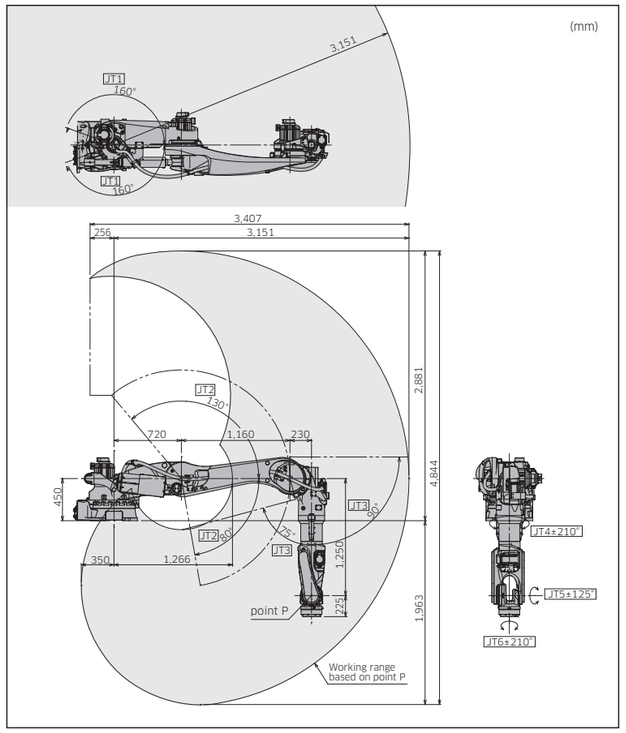

BXP series

【Applications】

Assembling　Handling　Spot welding

BXP110S

Standard Specifications

Type		Articulated robot
Degree of freedom (axes)		6
Payload (kg)		110
Max. reach (mm)		1,634
Position repeatability*1 (mm)		±0.06
Motion range (°)	Arm rotation (JT1)	±160
	Arm out-in (JT2)	+120 - −65
	Arm up-down (JT3)	+90 - −81
	Wrist swivel (JT4)	±210
	Wrist bend (JT5)	±125
	Wrist twist (JT6)	±210
Max. speed (°/s)	Arm rotation (JT1)	140
	Arm out-in (JT2)	130
	Arm up-down (JT3)	170
	Wrist swivel (JT4)	220
	Wrist bend (JT5)	185
	Wrist twist (JT6)	300
Allowable moment (N·m)	Wrist swivel (JT4)	855
	Wrist bend (JT5)	855
	Wrist twist (JT6)	445
Allowable moment of inertia (kg·m²)	Wrist swivel (JT4)	90
	Wrist bend (JT5)	90
	Wrist twist (JT6)	50
Mass (kg)		700
Mounting		Floor
Installation environment	Ambient temperature (℃)	0 - 45
	Relative humidity (%)	35 - 85 (No dew, nor frost allowed)
Degee of protection		Wrist : IP67 or equivalent　Base axes : IP54 or equivalent
Controller/Power requirements		F02/7.5kVA

*1: Conforms to ISO9283

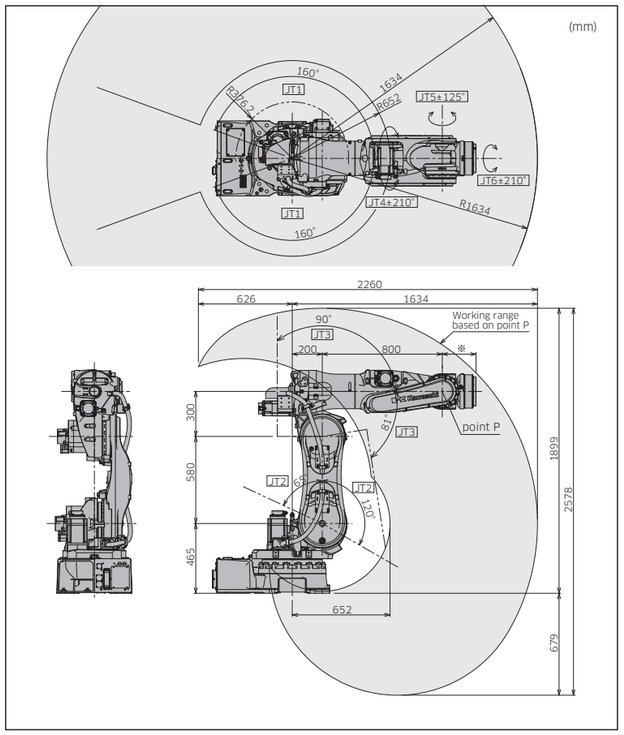

BXP110L

Standard Specifications

Type		Articulated robot
Degree of freedom (axes)		6
Payload (kg)		110
Max. reach (mm)		2,597
Position repeatability*1 (mm)		±0.06
Motion range (°)	Arm rotation (JT1)	±160
	Arm out-in (JT2)	+76 - −60
	Arm up-down (JT3)	+90 - −75
	Wrist swivel (JT4)	±210
	Wrist bend (JT5)	±125
	Wrist twist (JT6)	±210
Max. speed (°/s)	Arm rotation (JT1)	140
	Arm out-in (JT2)	130
	Arm up-down (JT3)	135
	Wrist swivel (JT4)	220
	Wrist bend (JT5)	200
	Wrist twist (JT6)	300
Allowable moment (N·m)	Wrist swivel (JT4)	855
	Wrist bend (JT5)	855
	Wrist twist (JT6)	445
Allowable moment of inertia (kg·m²)	Wrist swivel (JT4)	90
	Wrist bend (JT5)	90
	Wrist twist (JT6)	50
Mass (kg)		870
Mounting		Floor
Installation environment	Ambient temperature (℃)	0 - 45
	Relative humidity (%)	35 - 85 (No dew, nor frost allowed)
Degee of protection		Wrist : IP67 or equivalent　Base axes : IP54 or equivalent
Controller/Power requirements		F02/7.5kVA

*1: Conforms to ISO9283

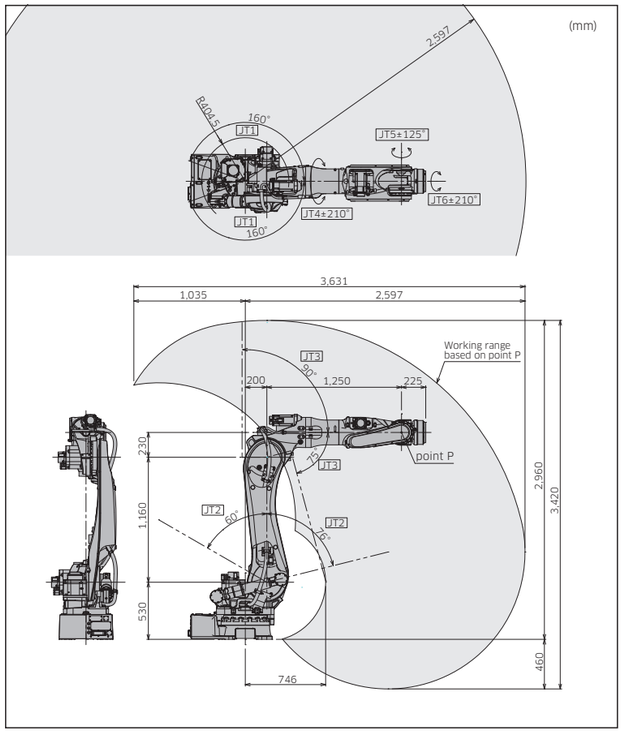

Features

- Built-in cables and hoses
- More compact and lighter than the BX series.
- Higher speed thanks to the new motion control technology of the F series controller.

BXP135X

Standard Specifications

Type		Articulated robot
Degree of freedom (axes)		6
Payload (kg)		135
Max. reach (mm)		2,991
Position repeatability*1 (mm)		±0.06
Motion range (°)	Arm rotation (JT1)	±160
	Arm out-in (JT2)	+76 - −60
	Arm up-down (JT3)	+90 - −75
	Wrist swivel (JT4)	±210
	Wrist bend (JT5)	±125
	Wrist twist (JT6)	±210
Max. speed (°/s)	Arm rotation (JT1)	140
	Arm out-in (JT2)	105
	Arm up-down (JT3)	140
	Wrist swivel (JT4)	220
	Wrist bend (JT5)	200
	Wrist twist (JT6)	300
Allowable moment (N·m)	Wrist swivel (JT4)	855
	Wrist bend (JT5)	855
	Wrist twist (JT6)	445
Allowable moment of inertia (kg·m²)	Wrist swivel (JT4)	90
	Wrist bend (JT5)	90
	Wrist twist (JT6)	50
Mass (kg)		880
Mounting		Floor
Installation environment	Ambient temperature (℃)	0 - 45
	Relative humidity (%)	35 - 85 (No dew, nor frost allowed)
Degee of protection		Wrist : IP67 or equivalent　Base axes : IP54 or equivalent
Controller/Power requirements		F02/7.5kVA

*1: Conforms to ISO9283

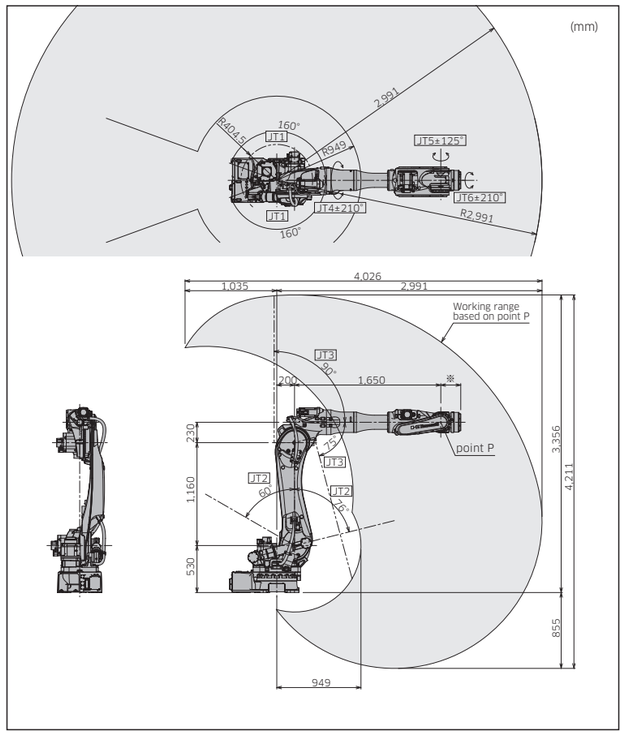

BXP210L

Standard Specifications

Type		Articulated robot
Degree of freedom (axes)		6
Payload (kg)		210
Max. reach (mm)		2,597
Position repeatability*1 (mm)		±0.06
Motion range (°)	Arm rotation (JT1)	±160
	Arm out-in (JT2)	+76 - −60
	Arm up-down (JT3)	+90 - −75
	Wrist swivel (JT4)	±210
	Wrist bend (JT5)	±125
	Wrist twist (JT6)	±210
Max. speed (°/s)	Arm rotation (JT1)	140
	Arm out-in (JT2)	105
	Arm up-down (JT3)	115
	Wrist swivel (JT4)	140
	Wrist bend (JT5)	135
	Wrist twist (JT6)	240
Allowable moment (N·m)	Wrist swivel (JT4)	1,380
	Wrist bend (JT5)	1,380
	Wrist twist (JT6)	600
Allowable moment of inertia (kg·m²)	Wrist swivel (JT4)	205
	Wrist bend (JT5)	205
	Wrist twist (JT6)	160
Mass (kg)		870
Mounting		Floor
Installation environment	Ambient temperature (℃)	0 - 45
	Relative humidity (%)	35 - 85 (No dew, nor frost allowed)
Degee of protection		Wrist : IP67 or equivalent　Base axes : IP54 or equivalent
Controller/Power requirements		F02/7.5kVA

*1: Conforms to ISO9283

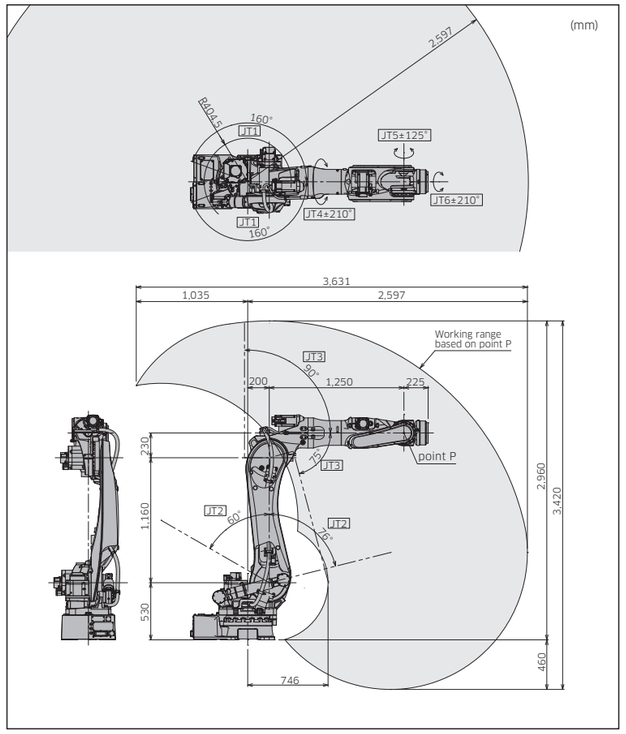

ZX series

【Applications】

Features

- Wide range of applications for every industry.
- Wide motion range of 360°
- Suitable for harsh environment thanks to wrist motors located at the shoulder.

ZX130S / ZX165U

Standard Specifications

Type		Articulated robot
Degree of freedom (axes)		6
Payload (kg)		130/165
Max. reach (mm)		2,651
Position repeatability*1 (mm)		±0.3
Motion range (°)	Arm rotation (JT1)	±180
	Arm out-in (JT2)	+75 - −60
	Arm up-down (JT3)	+250 - −120
	Wrist swivel (JT4)	±360
	Wrist bend (JT5)	±130
	Wrist twist (JT6)	±360
Max. speed (°/s)	Arm rotation (JT1)	130/110
	Arm out-in (JT2)	130/110
	Arm up-down (JT3)	130/115
	Wrist swivel (JT4)	180/140
	Wrist bend (JT5)	180/155
	Wrist twist (JT6)	280/260
Allowable moment (N·m)	Wrist swivel (JT4)	735/911.4
	Wrist bend (JT5)	735/911.4
	Wrist twist (JT6)	421/450.8
Allowable moment of inertia (kg·m²)	Wrist swivel (JT4)	51.9/78.4
	Wrist bend (JT5)	51.9/78.4
	Wrist twist (JT6)	27.4/40.2
Mass (kg)		1,350
Mounting		Floor
Installation environment	Ambient temperature (℃)	0 - 45
	Relative humidity (%)	35 - 85 (No dew, nor frost allowed)
Controller/Power requirements		E02/7.5kVA

*1: Conforms to ISO9283

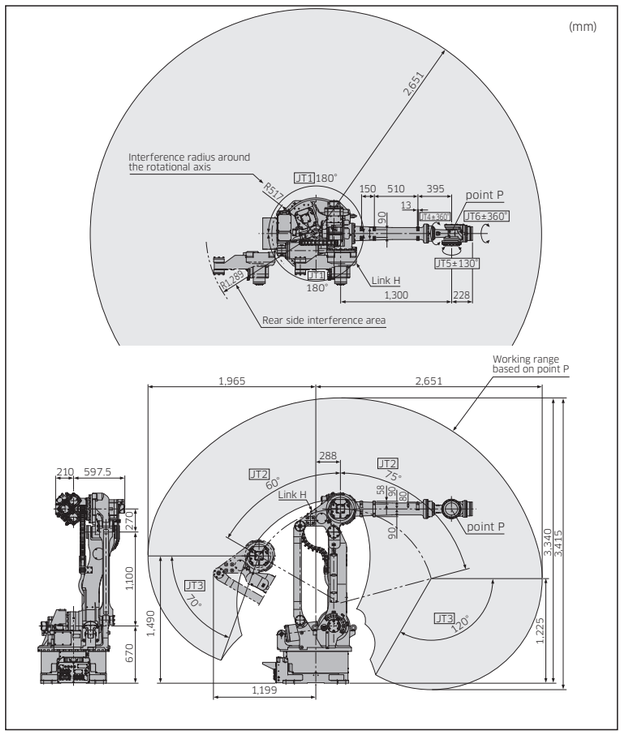

ZX200S

Standard Specifications

Type		Articulated robot
Degree of freedom (axes)		6
Payload (kg)		200
Max. reach (mm)		2,651
Position repeatability*1 (mm)		±0.3
Motion range (°)	Arm rotation (JT1)	±180
	Arm out-in (JT2)	+75 - −60
	Arm up-down (JT3)	+250 - −120
	Wrist swivel (JT4)	±360
	Wrist bend (JT5)	±130
	Wrist twist (JT6)	±360
Max. speed (°/s)	Arm rotation (JT1)	105
	Arm out-in (JT2)	110
	Arm up-down (JT3)	105
	Wrist swivel (JT4)	120
	Wrist bend (JT5)	120
	Wrist twist (JT6)	200
Allowable moment (N·m)	Wrist swivel (JT4)	1,274
	Wrist bend (JT5)	1,274
	Wrist twist (JT6)	686
Allowable moment of inertia (kg·m²)	Wrist swivel (JT4)	117.6
	Wrist bend (JT5)	117.6
	Wrist twist (JT6)	63.7
Mass (kg)		1,400
Mounting		Floor
Installation environment	Ambient temperature (℃)	0 - 45
	Relative humidity (%)	35 - 85 (No dew, nor frost allowed)
Controller/Power requirements		E02/7.5kVA

*1: Conforms to ISO9283

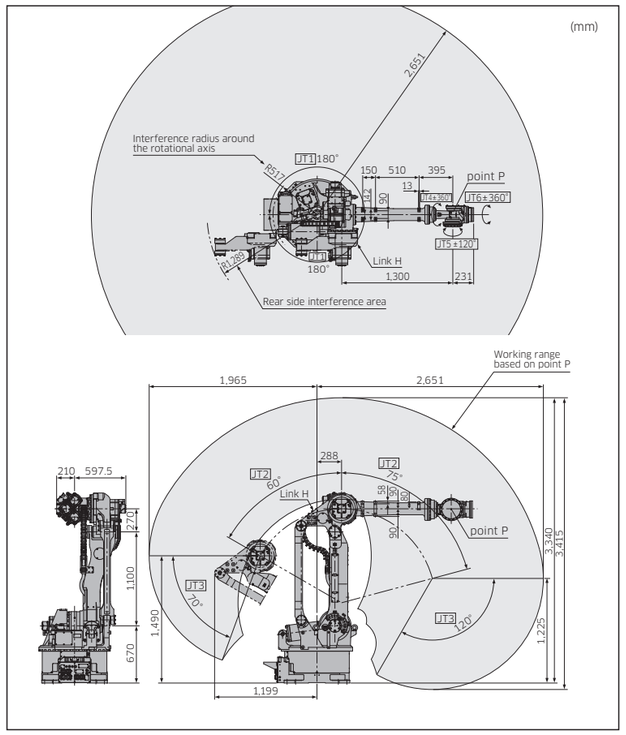

ZX130L

Standard Specifications

Type		Articulated robot
Degree of freedom (axes)		6
Payload (kg)		130
Max. reach (mm)		2,951
Position repeatability*1 (mm)		±0.3
Motion range (°)	Arm rotation (JT1)	±180
	Arm out-in (JT2)	+75 - −60
	Arm up-down (JT3)	+250 - −120
	Wrist swivel (JT4)	±360
	Wrist bend (JT5)	±130
	Wrist twist (JT6)	±360
Max. speed (°/s)	Arm rotation (JT1)	110
	Arm out-in (JT2)	110
	Arm up-down (JT3)	110
	Wrist swivel (JT4)	140
	Wrist bend (JT5)	135
	Wrist twist (JT6)	230
Allowable moment (N·m)	Wrist swivel (JT4)	735
	Wrist bend (JT5)	735
	Wrist twist (JT6)	421
Allowable moment of inertia (kg·m²)	Wrist swivel (JT4)	51.9
	Wrist bend (JT5)	51.9
	Wrist twist (JT6)	27.4
Mass (kg)		1,400
Mounting		Floor
Installation environment	Ambient temperature (℃)	0 - 45
	Relative humidity (%)	35 - 85 (No dew, nor frost allowed)
Controller/Power requirements		E02/7.5kVA

*1: Conforms to ISO9283

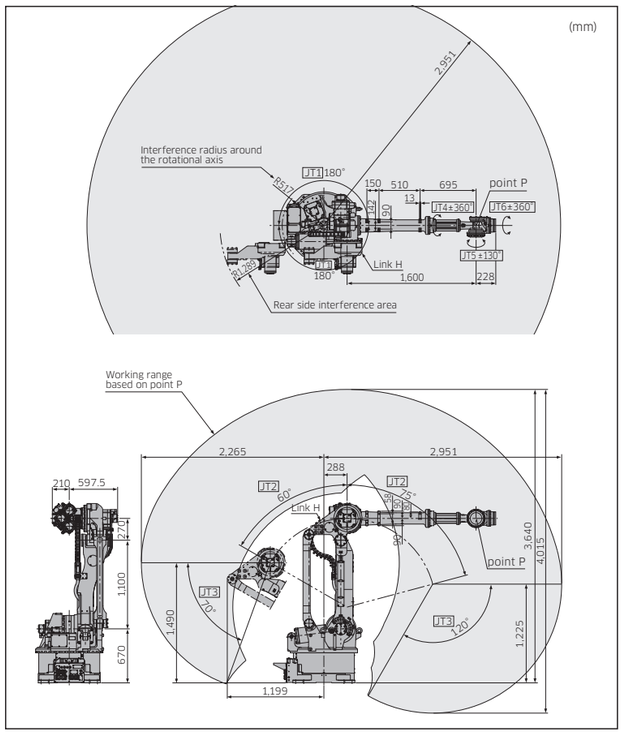

ZX300S

Standard Specifications

Type		Articulated robot
Degree of freedom (axes)		6
Payload (kg)		300
Max. reach (mm)		2,501
Position repeatability*1 (mm)		±0.3
Motion range (°)	Arm rotation (JT1)	±180
	Arm out-in (JT2)	+75 - −60
	Arm up-down (JT3)	+250 - −120
	Wrist swivel (JT4)	±360
	Wrist bend (JT5)	±130
	Wrist twist (JT6)	±360
Max. speed (°/s)	Arm rotation (JT1)	100
	Arm out-in (JT2)	85
	Arm up-down (JT3)	85
	Wrist swivel (JT4)	90
	Wrist bend (JT5)	90
	Wrist twist (JT6)	150
Allowable moment (N·m)	Wrist swivel (JT4)	1,715
	Wrist bend (JT5)	1,715
	Wrist twist (JT6)	862
Allowable moment of inertia (kg·m²)	Wrist swivel (JT4)	166.6
	Wrist bend (JT5)	166.6
	Wrist twist (JT6)	107.8
Mass (kg)		1,400
Mounting		Floor
Installation environment	Ambient temperature (℃)	0 - 45
	Relative humidity (%)	35 - 85 (No dew, nor frost allowed)
Controller/Power requirements		E02/7.5kVA

*1: Conforms to ISO9283

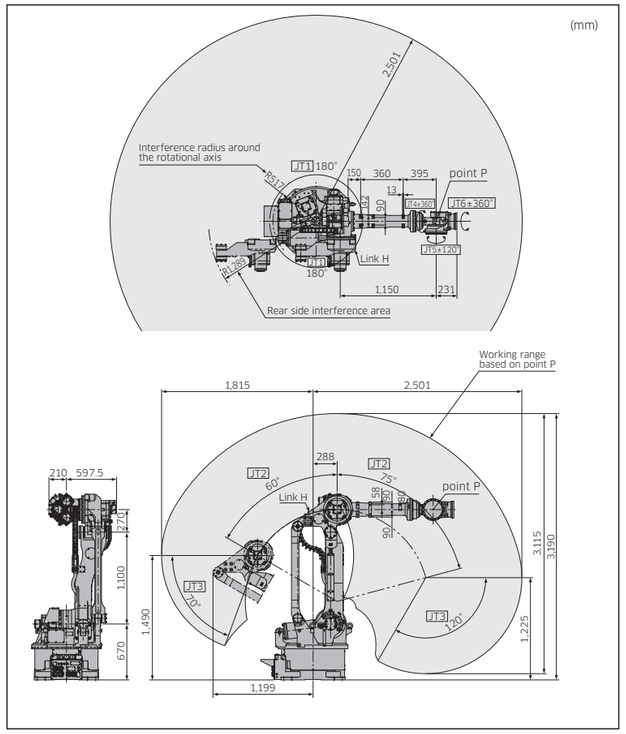

F02

Features

- Dimensions and weight have been reduced from its previous E-controller.
- This universal controller has common specifications that can be used globally.
  (An optional transformer unit is necessary in the region where the power supply and safety standard differ.)

Standard Specifications

Dimensions (mm)		W420×D530×H278
Type		Enclosed type, indirect cooling system (IP54 or equivalent)
Controlled (axes)		7
Memory capacity (MB)		16
I/O signals	External operation	Motor power off, Hold
	Input (Channels)	32
	Output (Channels)	32
Cable length	Teach pendant (m)	5
	Robot-controller (m)	5
Mass (kg)		25
Power requirements		AC200V - AC220V ±10%, 50/60Hz, 3Φ AC200V - AC230V ±10%, 50/60Hz, 1Φ*1
		Max. 7.5kVA
Installation environment	Ambient temperature (℃)	0 - 45
	Relative humidity (%)	35 - 85 (No dew, nor frost allowed)
Teach pendant		Color LCD display with touch-panel, E-Stop switch, Teach lock switch, Enable switch
Operation panel		E-stop switch, teach/repeat switch

*1: 200V single phase is available for some robot models only.

External view and dimensions

F02

(mm)

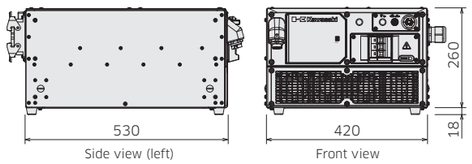

Transformer unit *Option

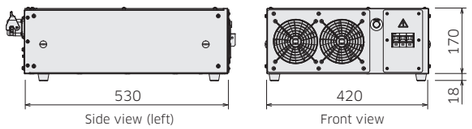

System configuration

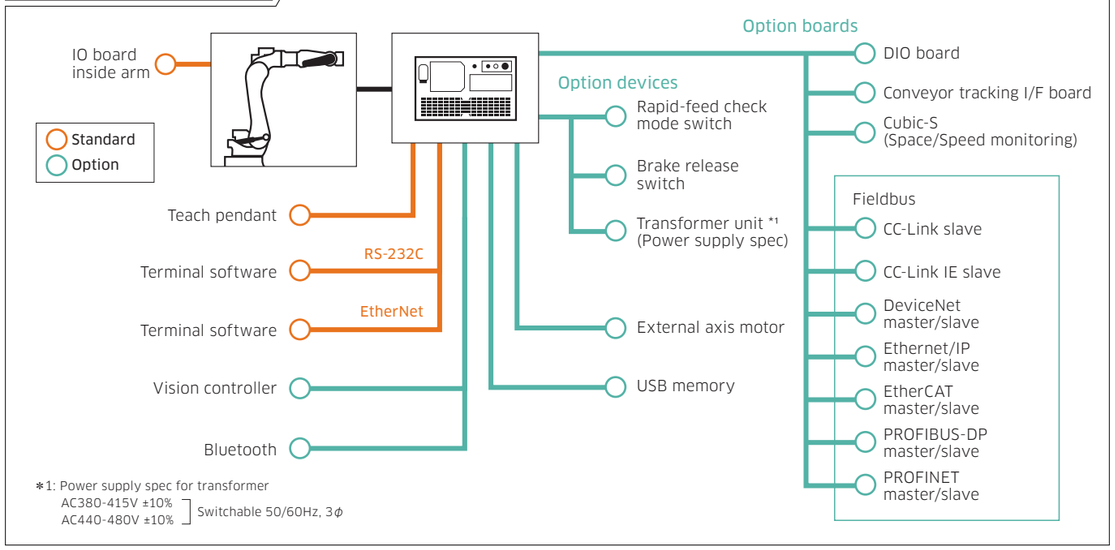

E02

Features

- Universal controller with common specifications to be used worldwide.
- Higher performance in a smaller cabinet compared to the previous controller

Standard Specifications

Dimensions (mm)		W550×D580×H278
Type		Enclosed type direct cooling system
Controlled (axes)		7
Memory capacity (MB)		8
I/O signals	External operation	Motor power off, Hold
	Input (Channels)	32
	Output (Channels)	32
Cable length	Teach pendant (m)	5
	Robot-controller (m)	5
Mass (kg)		40
Power requirements		AC200 - AC220V ±10%, 50/60Hz, 3Φ
		Max. 7.5kVA
Installation environment	Ambient temperature (℃)	0 - 45
	Relative humidity (%)	35 - 85 (No dew, nor frost allowed)
Teach pendant		Color LCD display with touch-panel, E-Stop switch, teach lock switch, Enable switch
Operation panel		E-stop switch, teach/repeat switch, control power lamp

External view and dimensions

E02

(mm)

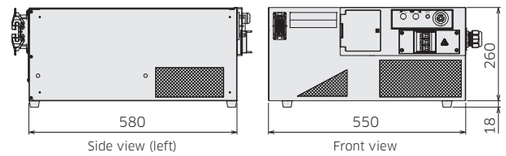

Transformer unit *Option

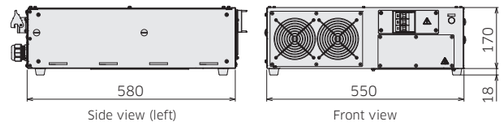
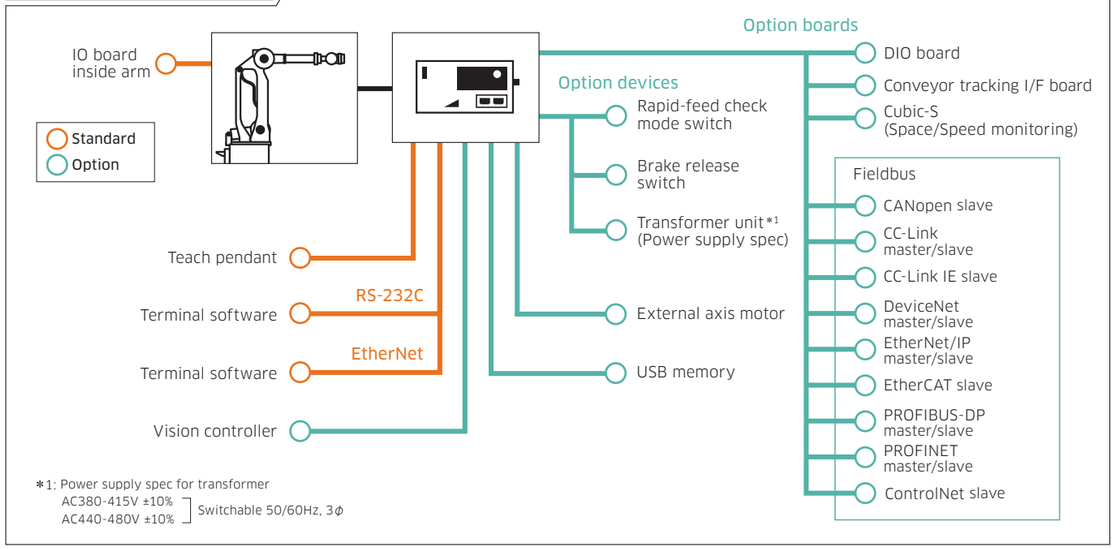
System configuration